REV.	DESCRIPTION	APPORVED	DATE	ECN

NOTES: (UNLESS OTHERWISE SPECIFIED)

1. Interface comply with IEC 61169-36.
2. Part must be packaged to avoid any damaged during transportation.
3. After crimping dimension should be AF/SW 2.67.

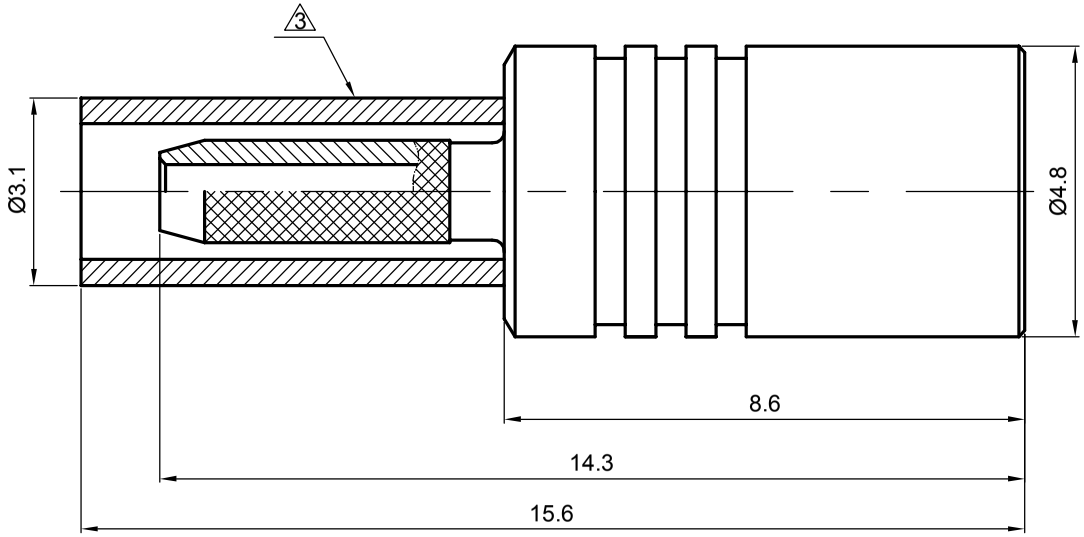

Recommended cable stripping dims

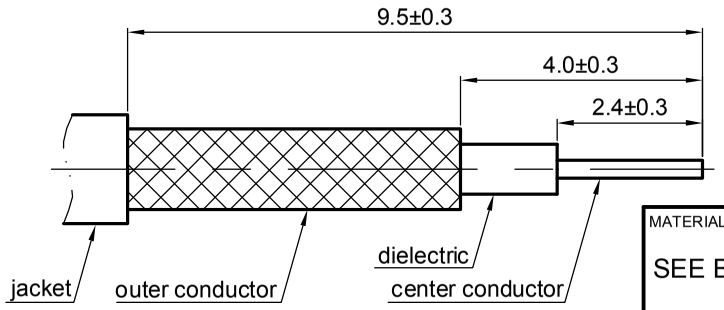

1.6

MATERIAL	TOLERANCES	THIRD ANGLE PROJECTION
SEE BOM OF DETAILS	0place X ±1 1place .X ±0.1 2place .XX ±0.05 Angle ±5°	GENERAL ECCENTRICITY 0.06
FINISH: SEE BOM OF DETAILS	Remove burrs and sharp edges -0.2 +0.2	
Plating part to be touched by gloves		
Dimension apply before plating		
XXX - measuring point for plating		
SURFACE / VOLUME		

	NAME	DATE
DRAWN BY	Billy.Lei	13 Dec 07
CHECKED BY		
APPROVED BY		

NOTICE: Those drawings and specifications are the property of ZEETEQ CORPORATION and used only for the specify purpose authorised by ZEETEQ

Zeeteq

TITLE: MCX,jack,cable

DWG NO.: 5235.MCX.JSC.05.111

REV.: S1

SCALE: 8:1 | DO NOT SCALE DRAWING | SIZE: A4 | SHEET: 1 of 1