REV.	DESCRIPTION	APPORVED	DATE	ECN

NOTES: (UNLESS OTHERWISE SPECIFIED)

1. The inferface comply with IEC169-10.
2. After crimping dimesion should be SW3.25
3. Part must be packaged to avoid any damages during transportation.

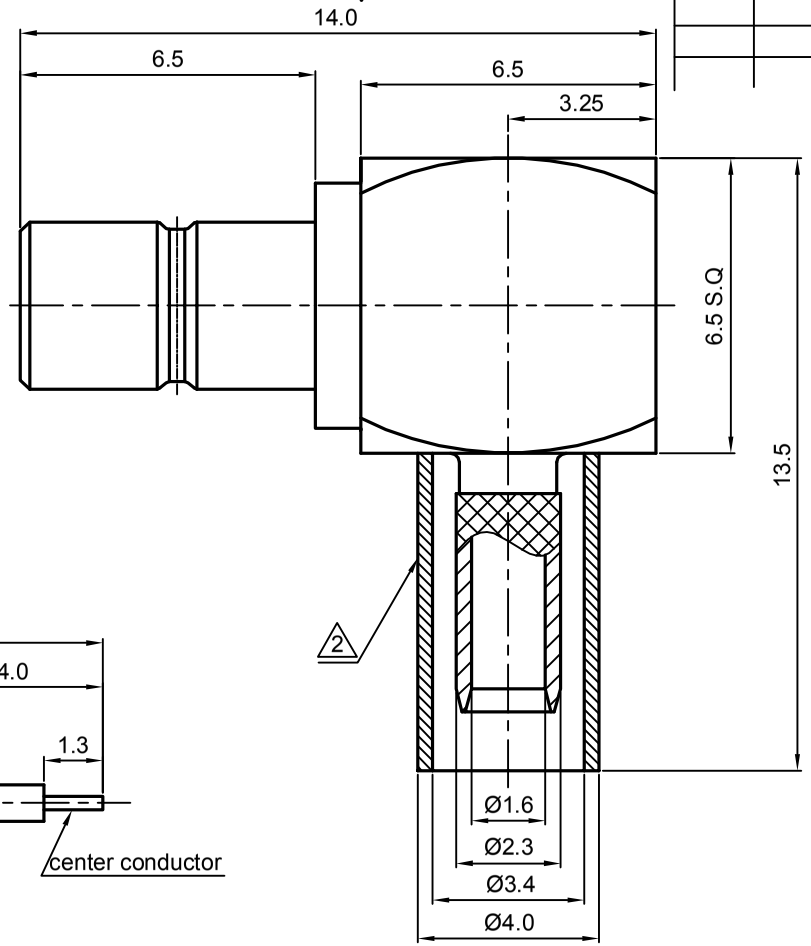

RECOMMENDED CABLE STRIPPING DIMENSIONS

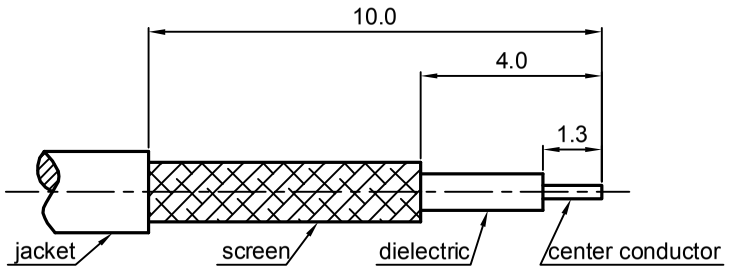

1.6

MATERIAL: SEE BOM FOR DETAILS	TOLERANCES: 0place X ±1; 1place .X ±0.1; 2place .XX ±0.05; Angle ±5°	THIRD ANGLE PROJECTION	Zeeteq
FINISH: SEE BOM FOR DETAILS	Remove burrs and sharp edges (-0.2, +0.2)	GENERAL ECCENTRICITY 0.06	TITLE: SMB, PLUG,CABLE
Plating part to be touched by gloves		NAME / DATE	
Dimension apply before plating		DRAWN BY: Danny 16NOV07	
XXX - measuring point for plating		CHECKED BY	DWG NO.: 5145.SMB.PRC.07.111
SURFACE / VOLUME		APPROVED BY	REV.: S1
			SCALE: 6:1 / DO NOT SCALE DRAWING / SIZE: A4 / SHEET: 1 of 1

NOTICE: Those drawings and specifications are the property of ZEETEQ CORPORATION and used only for the specify purpose authorised by ZEETEQ