REV.	DESCRIPTION	APPORVED	DATE	ECN
A	Rel to production	Johnny	21Sep07	
B	Au 0.2um to Au 0.1um in finish block.	Joy Zhou	25Sep07	ECN_07_003

NOTES: (UNLESS OTHERWISE SPECIFIED)

1. plating part can be only touched with gloves
2. Thread apply after plating.

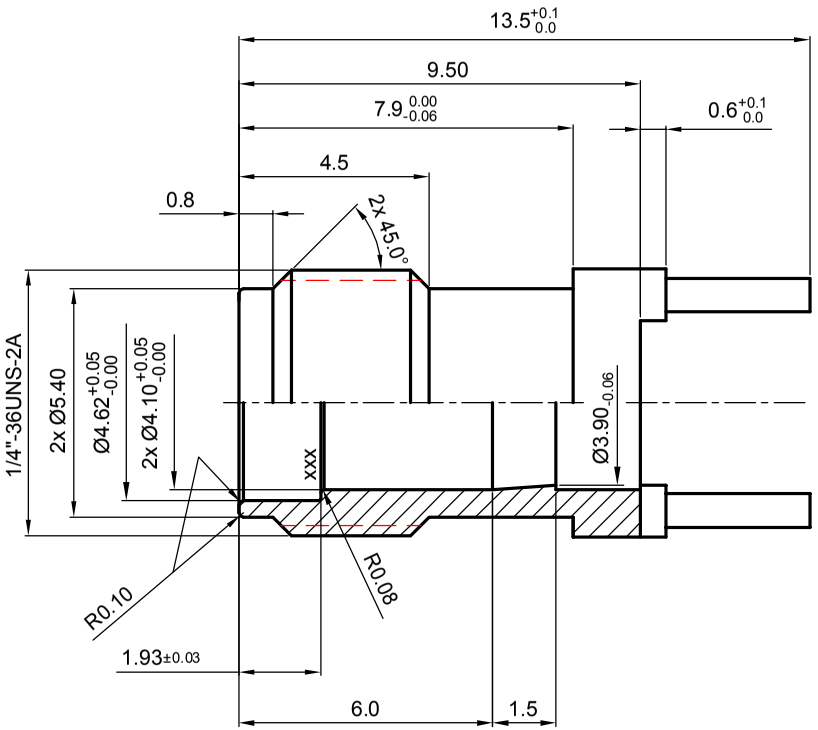

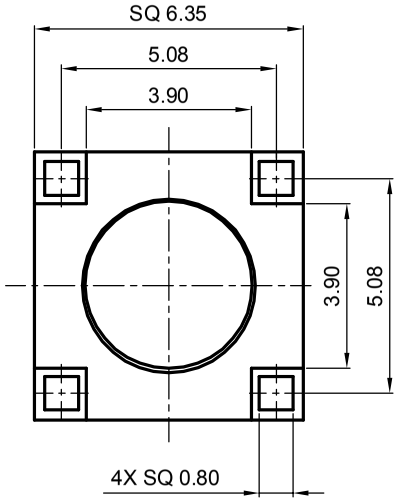

1.6

MATERIAL	TOLERANCES	THIRD ANGLE PROJECTION	Zeeteq
C3604	0place X ±1 1place .X ±0.1 2place .XX ±0.05 Angle ±5°	GENERAL ECCENTRICITY 0.06	
FINISH: Cuflash 0.5um + Ni 2um + Au 0.1um	Remove burrs and sharp edges -0.1 +0.1	NAME / DATE	TITLE: BODY
Plating part to be touched by gloves		DRAWN BY: Colin 12Sep07	
Dimension apply before plating		CHECKED BY: Walter 12Sep07	DWG NO. 6066.11
XXX - measuring point for plating		APPROVED BY: Johnny 12Sep07	REV. B
SURFACE / VOLUME	**NOTICE:** Those drawings and specifications are the property of ZEETEQ CORPORATION and used only for the specify purpose authorised by ZEETEQ		SCALE 6:1 / DO NOT SCALE DRAWING / SIZE A4 / SHEET 1 of 1